Clarke®



PLASMA CUTTER

MODEL NO: PLASMA KING 45SI

PART NO: 6016022

ASSEMBLY & USER INSTRUCTIONS

UK CA | CE

ORIGINAL INSTRUCTIONS

GC 04/26

INTRODUCTION

Thank you for purchasing this CLARKE Plasma Cutter.

Before attempting to use this product it is essential that you read this manual thoroughly and carefully follow all instructions given. In doing so you will ensure the safety of yourself and that of others around you and you can also look forward to the product giving you long and satisfactory service.

If however, having followed the instructions in this booklet carefully, you encounter problems, take the unit to your local CLARKE dealer.

Ensure that all components are present. Should any loss or damage be apparent, please contact your CLARKE dealer immediately.

Please keep these instructions in a safe place for future reference.

GUARANTEE

This CLARKE product is guaranteed against faulty manufacture for a period of 12 months from the date of purchase. Please keep your receipt as proof of purchase.

This guarantee is invalid if the product is found to have been abused or tampered with in any way, or not used for the purpose for which it was intended.

Faulty goods should be returned to their place of purchase, no product can be returned to us without prior permission.

This guarantee does not effect your statutory rights.

ENVIRONMENTAL PROTECTION



DO NOT dispose of this product or associated components with general household waste. All tools, accessories and packaging should be sorted, taken to a recycling centre and disposed of according to the laws governing Waste Electrical and Electronic Equipment.

Through the purchase of this product, the customer is taking on the obligation to deal with the WEEE in accordance with the WEEE regulations in relation to the treatment, recycling & recovery and environmentally sound disposal of the WEEE.

In effect, this means that this product must not be disposed of with general household waste. It must be disposed of according to the laws governing Waste Electrical and Electronic Equipment (WEEE) at a recognised disposal facility.

SPECIFICATION

Model	Plasma King 45Si
Part number	6016022
Dimensions L x W x H	450 x 165 x 180 mm
Weight	7 kg
Output min/max Amps	15-40 A
Open circuit voltage	320V (101V DC (measured)
Input voltage	230V ~ 50 Hz
Max input current I1Max/I1eff	13.9 A
Output voltage & current	15A/86V ~ 40A/96V
Duty cycle	20% @40 deg C
Ingress protection rating	IP21S
Insulation class	Class 1
Rated air pressure	0.6 Mpa
Gas consumption	5.6-6.3 cfm
Gas flow	16-18 L/min
Max cutting capacity	Steel 6mm / Stainless Steel 3mm
Power cable length	2.0 m
Torch cable length	4 m

GENERAL SAFETY PRECAUTIONS

Your plasma cutting unit is fitted with sophisticated safeguards which block functioning and therefore the cutting operations until all the safety conditions are present. The plasma cutting technique requires dangerously high voltage during cutting, therefore the following safety rules must be observed with great care.

GENERAL SAFETY

1. **NEVER** allow children or people unfamiliar with these instructions to use the machine.
2. **NEVER** operate the plasma cutter when you are tired, ill or under the influence of alcohol, drugs or medication.
3. **ALWAYS** wear suitable clothing and footwear.
4. **REMEMBER..**.the operator or user is responsible for accidents or hazards occurring to other people or their property.

ELECTRICITY

1. Make sure that the unit is earthed and that the supply line has an adequate earth connection.
2. Make sure that the work bench has a satisfactory earth connection.
3. Avoid contact between the metal bars being cut and bare skin or damp clothes.
4. **DO NOT** lean on the piece being cut or hold it in your hands.
5. **DO NOT** use in damp environments or on wet surfaces.
6. **DO NOT** use the unit if the torch or cables appear damaged.
7. **ALWAYS** turn the unit off before replacing any torch components.
8. **ALWAYS** switch the unit off and remove the power cable from the mains socket before carrying out any maintenance on the unit.



CAUTION: IF DURING THE CUTTING OPERATION A SLIGHT ELECTRIC SHOCK IS FELT, STOP WORK IMMEDIATELY AND DO NOT USE THE UNIT UNTIL THE FAULT HAS BEEN DISCOVERED AND RESOLVED.

CUTTING FUMES AND GASES

Harmful fumes and metallic powders are produced during the cutting operation. Metals which are painted or coated or which contain mercury, cadmium, zinc, lead and graphite may produce harmful concentrations of toxic fumes during cutting.

Parts & Service: 020 8988 7400 / E-mail: Parts@clarkeinternational.com or Service@clarkeinternational.com

1. To protect the operator or other persons from exposure to possible toxic fumes, fume respirators should be worn and work areas should be adequately ventilated.
2. When working in enclosed environments, an extractor should be provided.



CAUTION: WHEN HALOGENATED SOLVENTS OR DE-GREASING AGENTS ARE PRESENT, THE MATERIAL TO BE CUT SHOULD BE CLEANED PROPERLY TO PREVENT THE FORMATION OF TOXIC GASES. SOME CHLORINATED SOLVENTS MAY DECOMPOSE IN THE PRESENCE OF THE RADIATION GIVEN OUT BY THE ARC AND MAY GENERATE PHOSGENE GAS.

FIRE HAZARDS

1. Prevent sparks or hot scale from producing flames.
2. Remove inflammable or combustible materials from the cutting area.
3. Make sure that fire-fighting equipment is located near the work area.
4. Situate the unit in an area where the air can pass through the grilles on the panel.



CAUTION: **DO NOT** CUT FUEL OR LUBRICANT CONTAINERS EVEN IF THESE ARE EMPTY. **DO NOT** CUT CONTAINERS OR CASINGS WHICH CONTAIN INFLAMMABLE MATERIAL. NEVER CUT IN ENVIRONMENTS WHICH ARE CONTAINING INFLAMMABLE GAS OR COMBUSTIBLE LIQUID VAPOURS (SUCH AS PETROL).

EMC

Before using the plasma cutting unit, inspect the surrounding area, observing the following guidelines:

1. Make sure that there are no other power supply cables, control lines, telephone leads or other equipment near the unit.
2. Make sure that there are no radio receivers or television appliances.
3. Make sure there are no computers or other control systems.
4. Make sure that there is no-one with a pacemaker or hearing aid in the area around the unit.
5. Check the immunity of any other equipment operating in the same environment. In certain cases additional protective measures may be required.

Interference can be reduced in the following ways:

1. If there is interference in the power supply line, an E.M.C. filter should be inserted between the mains and the unit.
2. The output cables of the unit should be shortened; these should be kept close together and stretched along the ground.
3. All the panels of the unit should be correctly closed after carrying out repairs.

Parts & Service: 020 8988 7400 / E-mail: Parts@clarkeinternational.com or Service@clarkeinternational.com

PERSONAL PROTECTIVE EQUIPMENT

One of the hazards during the welding/cutting process is the emission of electromagnetic waves due to the electric arc. The length of these waves ranges from infrared to ultraviolet. If these rays hit the eyes, they can cause various complaints such as conjunctivitis, burns to the retina, deterioration of sight, etc. Moreover a high concentration of ultraviolet rays can burn the skin. It is, therefore, extremely important that the operator uses adequate protective clothing such as:

- Leather gloves
- Safety mask large enough to cover the whole of the face, equipped with safety lenses able to filter the radiation and reduce the intensity of the light produced
- Safety glasses can alternatively be used be used if rated at level 4 or 5 protection.

CAUTION: NEVER, UNDER ANY CIRCUMSTANCES LOOK AT AN ELECTRIC ARC WITHOUT EYE PROTECTION.

CAUTION: A FURTHER HAZARD FOR EYES IS THE RISK OF SPLINTERS OR PARTICLES WHICH MAY BE DETACHED DURING THE CUTTING OPERATION OR DURING GRINDING, BRUSHING OR HAMMERING AWAY OF ANY SCALE. ALWAYS WEAR GOGGLES OR SAFETY GLASSES TO PROTECT THE EYES.

IMPORTANT: Safety screens should be installed around the work area to protect other people who may be working in adjacent areas from the radiation given out by the arc.

SAFETY SYMBOLS

The following symbols are printed on a label on the machine. The meanings of the markings and symbols are shown below

	Read instruction manual before use		Wear ear protection when using this product
	Wear eye protection when using this product.		Wear protective footwear
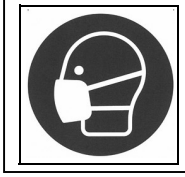	Wear mask to protect from toxic fumes		

Parts & Service: 020 8988 7400 / E-mail: Parts@clarkeinternational.com or Service@clarkeinternational.com

PRINCIPLES OF OPERATION

PRINCIPLES OF PLASMA CUTTING

Plasma Cutting is a fast, clean and distortion free, means of cutting through all types of metal from mild and stainless steels to aluminium brass and copper.

- An inert gas (compressed air) is blown at high speed out of the nozzle whilst at the same time an electrical arc travels through the gas heating it to an extremely high temperature which ionizes the gas.
- The column of heated ionized gas is called Plasma and is a good conductor of electricity.
- The cutting procedure utilises the plasma to transfer the electric arc to the metal workpiece which is melted by the heat and then blown out of the way using the compressed air supply.

HOW THE PLASMA CUTTER WORKS

The start of the cycle is determined by an arc which is struck between the electrode (positive polarity) and the workpiece (negative polarity) due to the short circuit between these two elements.

When the torch is brought into direct contact with the workpiece (connected to the positive polarity of the power source) the arc is transferred between the electrode and the workpiece itself thus striking a plasma arc, also called the cutting arc.

THERMAL PROTECTION DEVICE

This is installed at a point most subject to high temperatures such as the power transformer and rectifying units. An amber light on the front panel lights up when the thermal protection device intervenes.

LIST OF ITEMS SUPPLIED

The machine is delivered with the following components:

- Air regulator (supplied loose)
- Pressure gauge (supplied loose)
- SG55 type torch assembly
- Earth lead
- Spare torch parts

Parts & Service: 020 8988 7400 / E-mail: Parts@clarkeinternational.com or Service@clarkeinternational.com

MACHINE OVERVIEW

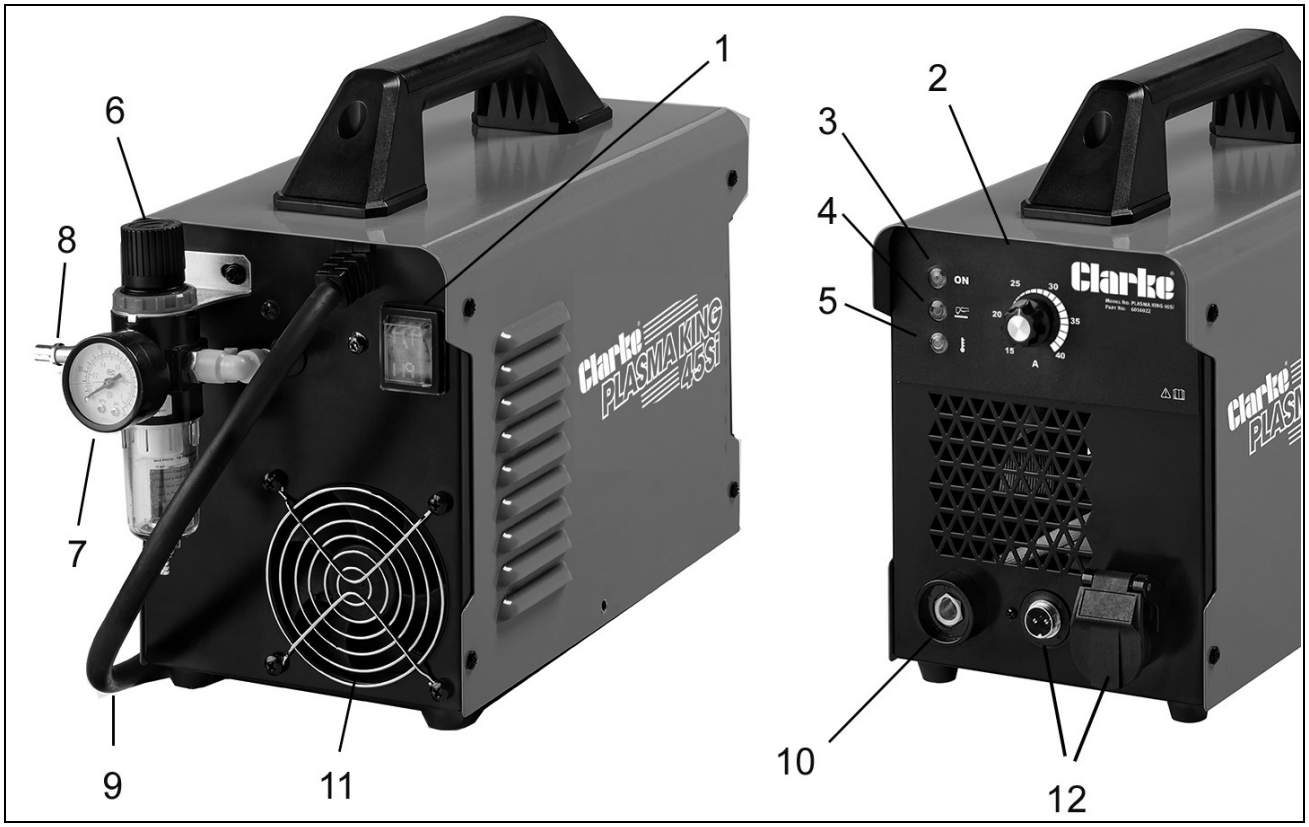

1	ON/OFF Switch	
2	Output current knob	Adjusts the cutting current supplied by the machine according to the thickness of material/cutting speed.
3	Power on LED	Indicates the machine is active
4	Cutting indicator	Indicates the machine is cutting
5	Overheating indicator	This indicates the machine has shut down due to overheating. It will re-start once it has cooled.
6	Air regulator	Adjusts and sets the input air pressure
7	Pressure gauge	Displays the working air pressure
8	Compressed air connection	
9	Power cable with 16A plug	
10	Connector for earth cable with clamp	
11	Cooling fan	
12	Connector for cutting torch plus auxiliary connector	

ELECTRICAL CONNECTION

⚠	**WARNING: READ THESE SAFETY INSTRUCTIONS THOROUGHLY BEFORE CONNECTING THE MACHINE TO A POWER SUPPLY. THE INSTALLATION OF THIS APPLIANCE SHOULD BE CARRIED OUT BY A COMPETENT ELECTRICIAN AND BE IN ACCORDANCE WITH CURRENT IEE WIRING REGULATIONS (BS4343).**

This machine is fitted with an industrial plug and **MUST** be connected to a 230 Volt, 1 phase 50Hz supply through a suitably rated isolator switch. Before switching on, make sure the voltage of your electricity supply is correct. Connecting it to any other power source may cause damage.

The user should purchase a suitable connecting cable capable of handling 16 Amps with a supply plug rated at 16A or better. A length of 2-3 metres is recommended giving mobility to the appliance but without becoming a trip hazard.

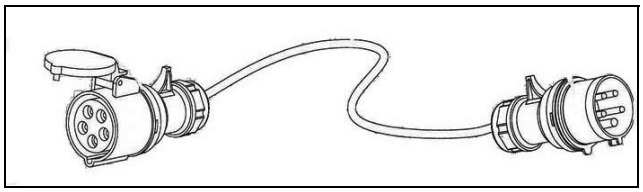

If the plug has to be changed due to damage a replacement should be fitted following the wiring instructions shown below.

⚠	**WARNING: THE WIRES IN THE POWER CABLE OF THIS PRODUCT ARE COLOURED IN ACCORDANCE WITH THE FOLLOWING CODE: BLUE = NEUTRAL BROWN = LIVE YELLOW = EARTH**

If the colours of the wires in the power cable of this product do not correspond with the markings on the terminals of your plug, proceed as follows.

- The **Blue** wire must be connected to the terminal marked **N** or **Neutral**.
- The **Brown** wire must be connected to the terminal marked **L** or **Live**.
- The **Yellow** wire must be connected to the terminal marked **E** or **Earth**.

If in any doubt, consult a qualified electrician. **DO NOT** attempt any repairs yourself.

The plug must be BS60309 approved.

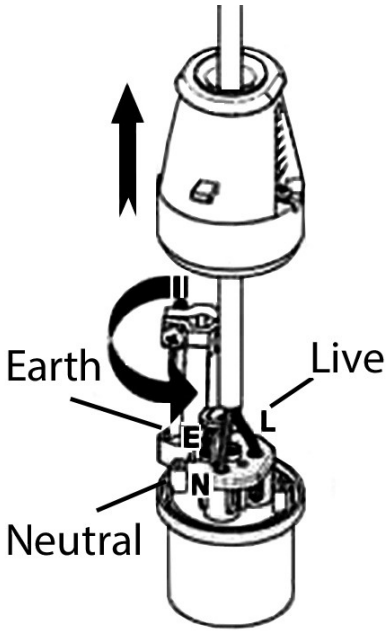

COMPRESSED AIR SUPPLY

AIR SUPPLY AND PRESSURE

A source of clean, dry air or nitrogen must be supplied to your plasma cutting unit. The supply pressure must be:

- Between 65 and 85 psi (0.4 - 0.6 Mpa)
- The supply must also have a flow rate of approximately 16-18 L/min (5.6-6.3cuft/min).
- The unit will not operate if the input air pressure is below 55 psi.

Failure to observe these precautions could result in excessive operating temperatures or damage to the plasma cutter.

FITTING THE REGULATOR

Fit the regulator to the machine using the mounting bracket supplied. Screw the bracket to the machine and attach the regulator using the red securing ring.

Connect the air regulator outlet tube to the connector on the back of the machine.

Screw the pressure gauge (supplied loose) onto the regulator.

Push-fit the compressed airline to the regulator.

The air regulator should be set with an optimum pressure setting of 65 psi, (4.5 Bar).

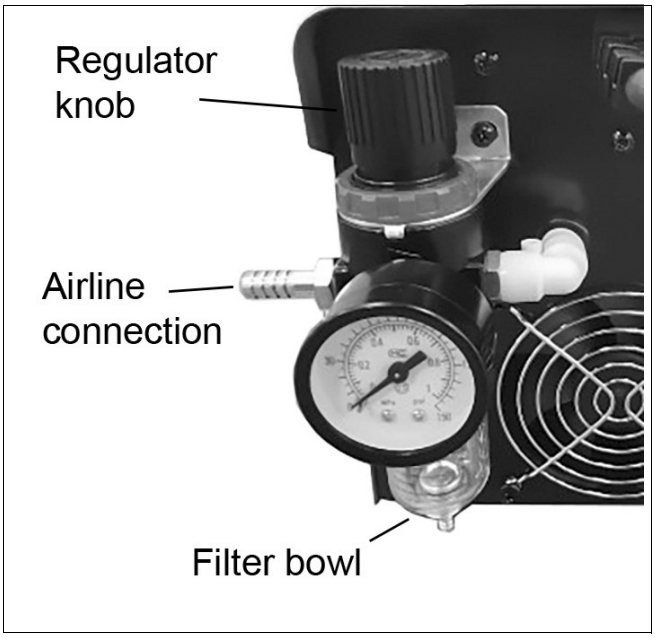

NOTE: The regulator should never be set above 90psi.

NOTE: The spring loaded drain valve (bottom of the air regulator) will be normally closed. To discharge any water build-up, pull the discharge nozzle downwards.

Parts & Service: 020 8988 7400 / E-mail: Parts@clarkeinternational.com or Service@clarkeinternational.com

MACHINE CONNECTION

1. Connect the power supply cable to a 16A power socket.
2. Connect the earth cable to the left socket on the front of the plasma cutter.
3. Connect the cutting torch to the right connecting socket (lift flap and screw in).
4. Connect the cutting torch auxiliary cable to the centre socket.



5. Pull out the air regulator knob and turn it fully clockwise.

- This ensures the regulator is set to minimum.
- This cutting machine uses compressed air at (0.4~0.6Mpa).

6. Turn the compressed air supply on.
7. Turn the air regulator on the plasma cutter to a pressure of 4.5 bar.
8. When the pressure is set, lock the regulator knob in position by pushing it in.
9. Fasten the earth clamp to the workpiece. If a metal bench is being used, make sure it has also been connected to earth.

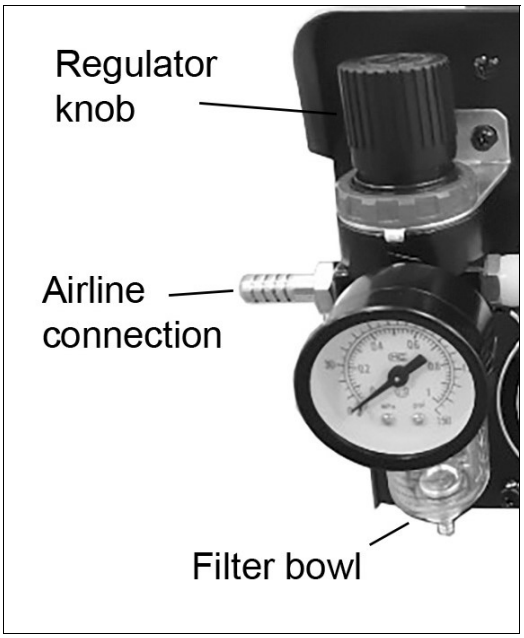

- If the surface of the piece to be cut is painted, rusty or covered with insulating material, clean the surface so that satisfactory contact between the workpiece and the earth clamp can be obtained.

Parts & Service: 020 8988 7400 / E-mail: Parts@clarkeinternational.com or Service@clarkeinternational.com

SWITCHING ON/OFF

1. Switch the plasma cutter ON using the ON/OFF switch.

- The upper LED will light up on the front panel.

Before starting, ensure that no short circuit is formed between the torch and the workpiece.

USING THE PLASMA CUTTER

The torch can be comfortably held in one hand or steadied with two hands.

1. Choose the technique that feels most comfortable and allows good control and movement. Position the index finger or thumb to depress the control switch on the torch handle.
2. Start cutting. During the cutting process, the current can be adjusted by the potentiometer knob according to the cutting performance until a satisfactory cutting effect is obtained.

DO NOT touch the workpiece and cutting torch by hand until fully cooled.

DO NOT block the cooling fan while running. Check the ventilation before use.

DO NOT strain the cable or stand on it.

DO NOT drag the cable over sharp edges or abrasive surfaces.

EDGE CUTTING

1. With the torch in starting position, squeeze the torch trigger.

- The unit will initiate gas purge (pre-flow) to remove any condensation that has accumulated in the torch.

2. Once on, the cutting arc remains on as long as the trigger is held down unless the torch is withdrawn from the work or torch motion is too slow. Keep moving while cutting.
3. Hold the torch perpendicular to the workpiece with the front of the tip on the edge of the workpiece at the point where the cut is to start.
4. Keep the torch in contact with the workpiece. For standoff cutting hold the torch 2-3 mm from the work.
5. Cut at a steady speed without pausing. Maintain the cutting speed so that the arc lag is behind the travel direction.

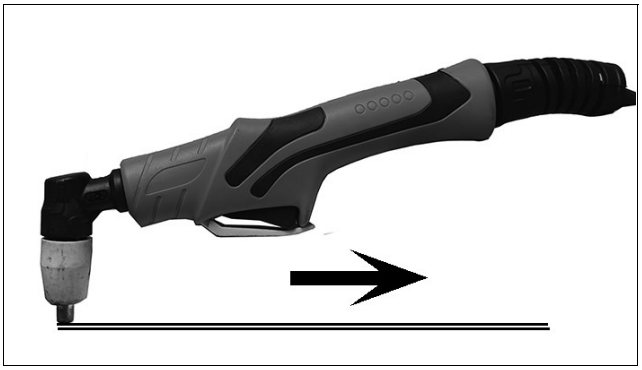

6. It is normally best to use a straight edge, assuming a straight cut is required. This will prevent the torch from wandering and give a clean, straight cut with minimal energy usage and heat buildup.
7. For curved cuts, a suitable guide or template may be used to achieve a similarly clean and accurate cut.

PLUNGE CUTTING

1. If plunge cutting in the centre of a workpiece, start by holding the torch at an angle of tilt in order to direct the sparks away from the torch to avoid fouling the torch tip with splatter. All particles will then blow away from the operator and torch.
2. If you need to make a cut on a metal sheet which has a thickness of more than 2mm without an edge start, make a hole using an electric drill before you start cutting.
3. Complete the piercing off the cutting line and then continue the cut onto the line. Hold the torch perpendicular to the workpiece after the cut is complete.
4. Clean spatter and scale from the shield cup and the tip as soon as possible. Spraying or dipping the shield cup in anti-spatter compound will minimize the amount of scale which adheres to it.



CAUTION: SPARKS FROM THE CUTTING PROCESS CAN CAUSE DAMAGE TO COATED, PAINTED AND OTHER SURFACES SUCH AS GLASS, PLASTIC AND METAL

NOTE: Handle torch leads with care and protect them from damage.

- Keep the area around the machine clean and free of combustible materials.
- **DO NOT** allow items to collect which could obstruct cooling air to the machine.

SHUTTING OFF THE MACHINE

1. To stop cutting, withdraw the torch from the workpiece and release the trigger.

- When the trigger is released, compressed air will continue to flow for a short period of time in order to cool the torch. **DO NOT** switch off the machine until the air has stopped flowing or damage may occur to the torch.

2. Turn off the power, turn off the gas and clean up the machine.

DO NOT short-circuit the conductive nozzle and the workpiece. The short circuit will burn out the conductive nozzle. Once burned out, it needs to be replaced otherwise it will affect the cutting quality.

The cutting torch has a high temperature and should be handled properly and not placed on flammable objects or surfaces with a low melting point.

Parts & Service: 020 8988 7400 / E-mail: Parts@clarkeinternational.com or Service@clarkeinternational.com

POTENTIAL PROBLEMS DURING USE

Defect	Remedy
Insufficient penetration	Cutting speed too high Torch is tilted Workpiece is too thick Cutting current is too low Torch parts are worn out
Interruption of the cutting arc	Cutting speed too slow Excessive distance between torch and workpiece Current incorrect. Adjust potentiometer. Torch parts are worn out Non-genuine manufacturer's parts Work cable is disconnected
Excessive (slag) settlement	Too low cutting speed (bottom dross) Too high cutting speed (top dross) Excessive distance between torch and workpiece Cutting current too low Torch parts are worn out Non-genuine manufacturer's parts
Tilted cutting	Torch position not correct Asymmetric wear of nozzle hole and/or wrong assembly of the torch parts
Excessive wear of the nozzle and electrodes	Air pressure too low Exceeding system capability (material too thick) Contaminated air (humidity or oil) Improperly assembled torch Torch tip contacting workpiece Damaged or loose torch head components Non-genuine manufacturer's parts

Parts & Service: 020 8988 7400 / E-mail: Parts@clarkeinternational.com or Service@clarkeinternational.com

MATERIAL CUTTING THICKNESS

Material type	Material thickness best clean cut	Material thickness severance deepest cut
Aluminium	2 mm	3
Steel	8 mm	12
Stainless Steel	5 mm	6
Copper	2 mm	3
Supplier data Feb 26		

Parts & Service: 020 8988 7400 / E-mail: Parts@clarkeinternational.com or Service@clarkeinternational.com

CARE AND MAINTENANCE

CAUTION: ENSURE THE MACHINE COMPONENTS HAVE COOLED BEFORE BEFORE PERFORMING ANY MAINTENANCE.

MACHINE

1. Regularly clean the equipment to remove any dirt that could clog up the machine. **DO NOT** use solvents or strong detergents when cleaning the equipment.
2. Inspect the cutting cables regularly and replace any cable that show signs of damage such as fraying or cracks.
3. Regularly check any gas cylinder used for pressure and leaks. Replace any gas cylinder if it is empty or damaged.
4. When not in use, store your cutting equipment in a clean, dry location. Keep the equipment covered to protect it from dust, moisture and other environmental factors.
5. All repairs must be carried out buy a qualified service engineer.

TORCH

The torch assembly and cable should be periodically inspected and cleaned.

- If there is damage to the insulation such as breaks, cracks and burns or even a loosening of electric conductors, the torch must not be used.

To replace the consumable parts in the torch:

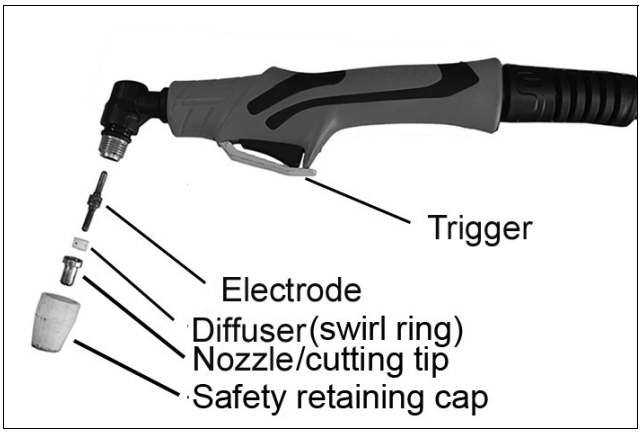

1. Unscrew the retaining cap from the torch head assembly.
   - Clean the cap thoroughly and replace if it is damaged (burns, distortions or cracks).
2. Remove the nozzle, gas diffuser ring and electrode and replace if substantially burned or otherwise damaged.
   - Always replace the nozzle, gas diffuser ring and electrode at the same time.
3. Replace the retaining cap taking care not to cross-thread it.

COMPRESSED AIR FILTER

The filter/regulator unit is equipped with a filter for the compressed air which should trap any water or oil in the air supply. The filter bowl is fitted with a pull-valve for the manual drain of any condensation collected in the bowl. Pull the discharge connector downwards to drain.

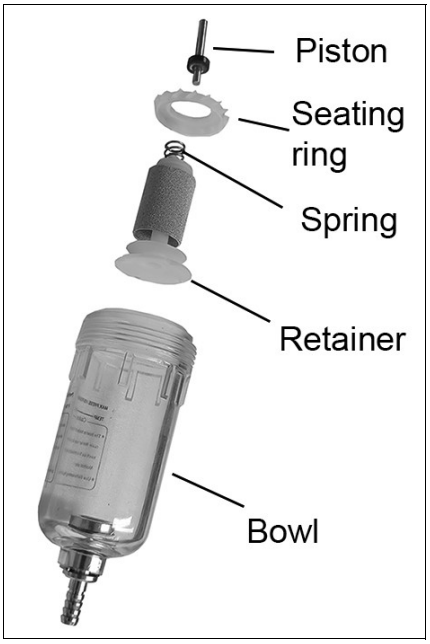

CLEANING THE AIR FILTER

If the internal parts of the air filter become foul it can be dismantled for cleaning.

Unscrew the bowl from the unit body and carefully remove the retainer, filter cartridge, spring, seating ring and piston. Washer all parts with soapy water before reassembling in reverse order.

COMPONENT PARTS

1	Handle cover
2	Handle
3	Upper casing
4	Switch
5	Power cable assembly
6	Pneumatic elbow joint
7	Air Filter/regulator assembly
8	Fan cover
9	Air inlet connection
10	DC cooling fan
11	Solenoid Valve
12	Main PCB
13	High frequency board
14	Arc starting PCB
15	Footpad
16	Torch connection socket

17	Fixed mounting ring
18	Flat gasket
19	Torch joint
20	Auxiliary socket
21	Quick negative connector
22	Insulator base
23	LED light
24	Potentiometer control knob
25	Control panel
26	Angle bracket
27	Lower casing
28	PC board
29	Support beam
30	PCB mounting
31	Bracing strip

Parts & Service: 020 8988 7400 / E-mail: Parts@clarkeinternational.com or Service@clarkeinternational.com

COMPONENT PARTS

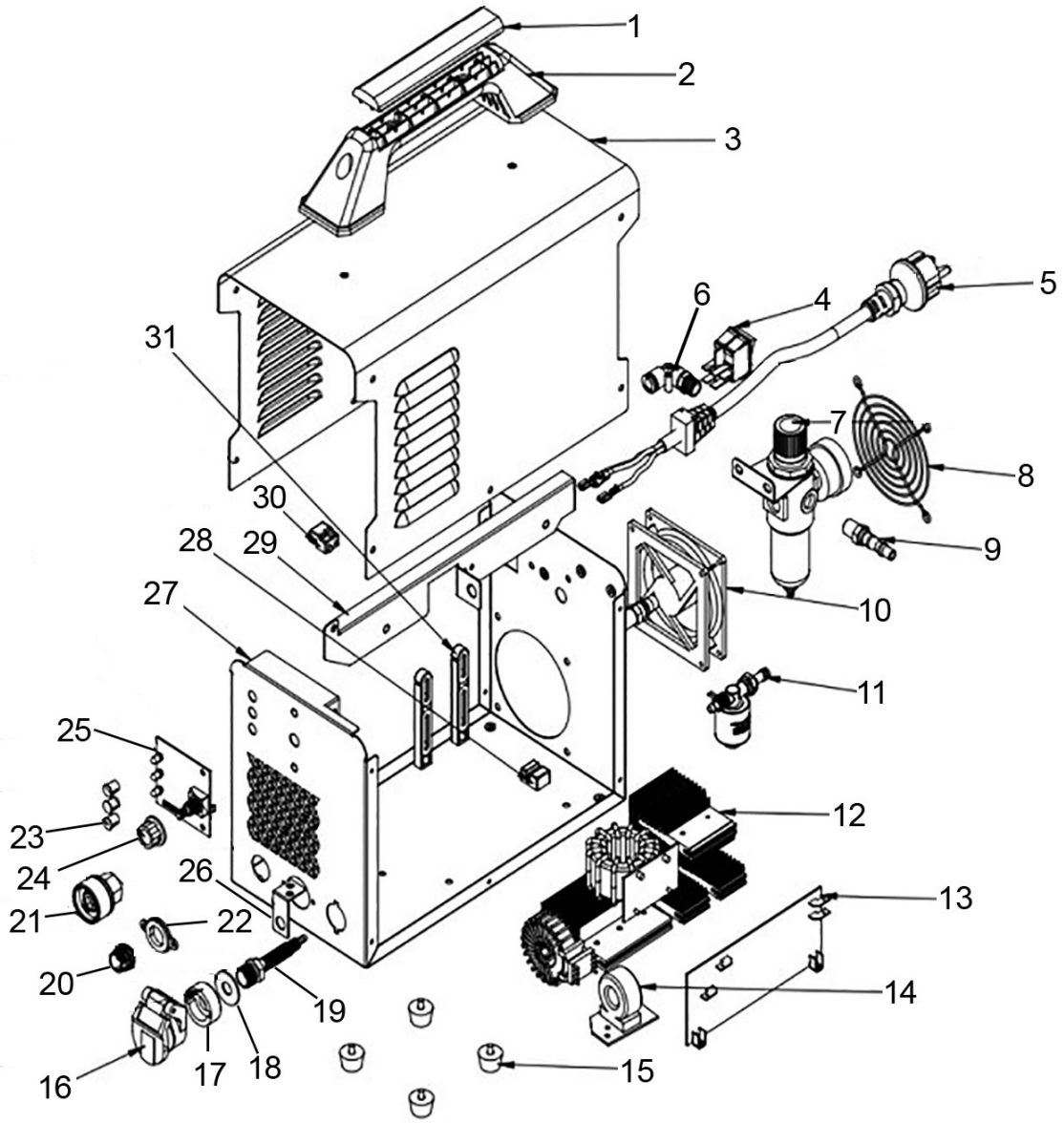

TROUBLE SHOOTING

Problem	Remedy
GREEN Power LED OFF No input power. Fan not operating.	Plug unit into power outlet. Reset circuit breaker.
GREEN Power LED ON YELLOW LED ON Unit is overheating.	Make sure the unit has not been operated beyond duty cycle limits. Air flow obstructed.
GREEN Power LED ON YELLOW LED FLASHES No air flow in purge or pre-flow.	Air not connected or pressure too low. Check source for at least 5 Bar (72 PSI) during purge or pre-flow, adjust air pressure to approx 4.5 Bar (65 PSI). Air filter or air line blocked, torch blocked. Contact your CLARKE service department to replace the filter cartridge. Check that air line and torch leads are free of twists and kinks.
GREEN Power LED ON YELLOW LED OFF No air flow when torch switch pressed.	Shield not properly installed on torch. Check that shield is fully seated against torch. Faulty torch switch. Faulty Main PC Board repair/replace power supply.
GREEN Power LED ON YELLOW LED OFF Air flows, cutting arc does not start.	Faulty torch parts. Inspect torch parts and replace if necessary. Air/Gas pressure too high. Set pressure to 65 psi (4.5 BAR). Faulty main PC Board. Contact your CLARKE service department.

Parts & Service: 020 8988 7400 / E-mail: Parts@clarkeinternational.com or Service@clarkeinternational.com

MACHINE RATING PLATE

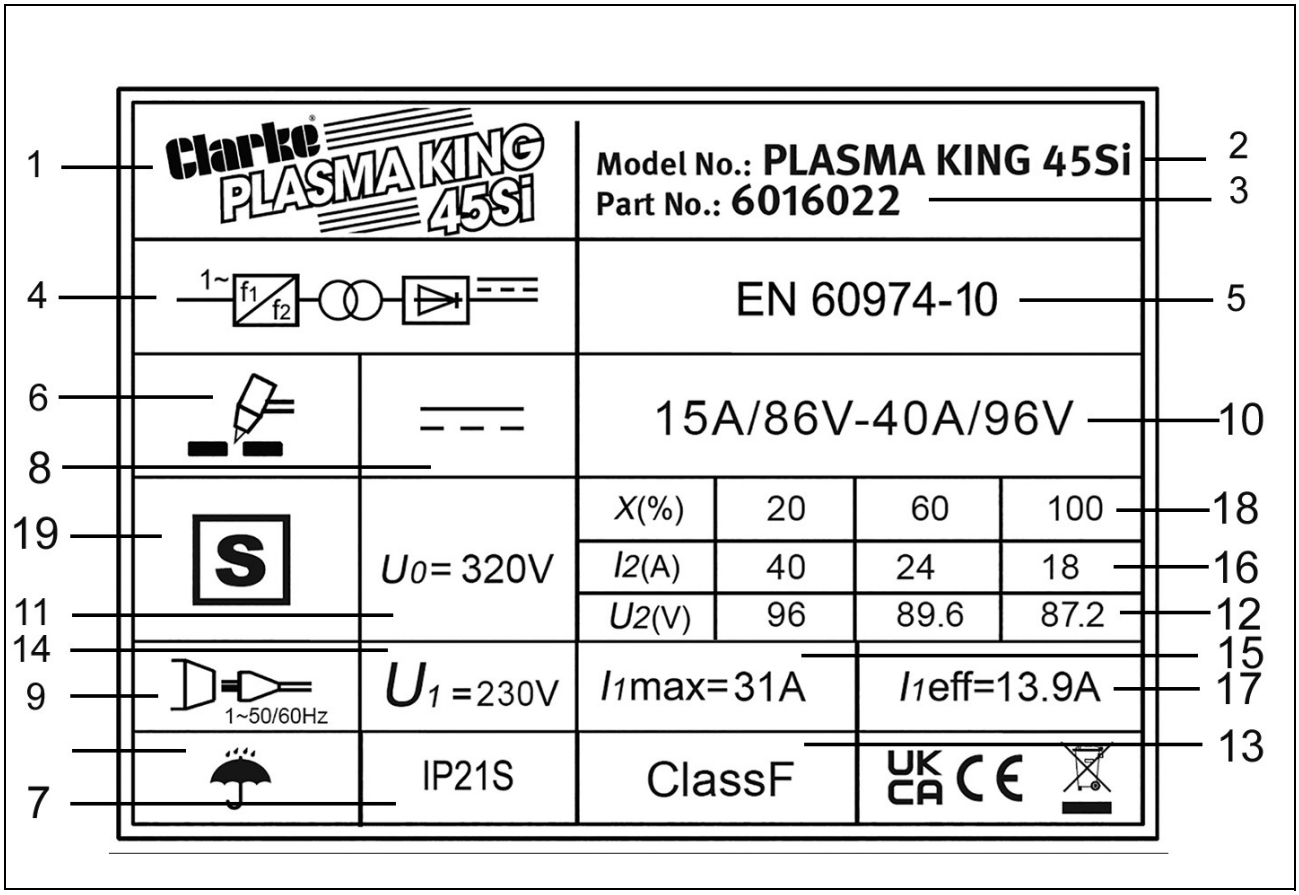

1	Name of manufacturer	11	Rated No-load Voltage
2	Model Number	12	Conventional Load Voltage
3	Part number	13	Insulation grade
4	Cutting Power Source	14	Rated Supply Voltage
5	British Standards applied	15	Rated Maximum Supply Current
6	Process symbol	16	Rated cutting current value
7	Degree of Protection	17	Rated Max input current
8	Cutting Current symbol	18	Duty Cycle
9	Energy Supply symbol	19	Suitable for welding in environments with a high risk of electric shock
10	Range of output		

This machine is covered by regulations EN 60974-1:2022+A1:2022 / EN 60974-10: 2021+A1:2015, where the Duty Cycle is expressed as a percentage of time the machine may be used in a given period for a specified cutting current. e.g. When cutting at 24 Amps the machine may be used for 6 minutes (60%) in any 10 minute period.

DECLARATIONS OF CONFORMITY- UK

UK CA

Clarke®
INTERNATIONAL
Hemnall Street, Epping, Essex, CM16 4LG

DECLARATION OF CONFORMITY

This is an important document and should be retained.

We hereby declare that this product(s) complies with the following legislation:

2009/125/EC	*Ecodesign Directive*
2014/30/EU	*Electromagnetic Compatibility Directive*
2014/35/EU	*Low Voltage Directive*
2011/65/EU	*Restriction of Hazardous Substances (RoHS) Directive*

The following standards have been applied to the product(s):

IEC 62321-3-1:2013, IEC 62321-7-1:2015, IEC 62321-5:2013, IEC 62321-6:2015, IEC 62321-8:2017, DIN EN 50525-2-21:2012-01, EN IEC 60974-10:2021, EN IEC 60974-13:2021, EN 50525-2-21:2011, EN IEC 60974-1:2022+A11:2022+A12:2023, IEC 62321-4:2013+AMD1:2017, EN IEC 60974-7:2019, IEC 62321-7-2:2017, IEC 60974-1:2021, EN 60974-12:2011

The technical documentation required to demonstrate that the product(s) meet(s) the requirement(s) of the aforementioned legislation has been compiled and is available for inspection by the relevant enforcement authorities.

The UKCA mark was first applied in: 2025

Product Description:	Plasma Cutter
Model Number(s):	PLASMA KING 45SI
Serial/Batch Number:	Refer to product/packaging label
Date of Issue:	17/12/2025

Signed:

J.A Clarke

Director

PLASMA KING 45SI UKCA Clarke DOC 121725 Page 1 of 1

DECLARATIONS OF CONFORMITY - CE

CE

Clarke®
INTERNATIONAL

Fitzwilliam Hall, Fitzwilliam Place, Dublin 2

DECLARATION OF CONFORMITY

This is an important document and should be retained.

We hereby declare that this product(s) complies with the following legislation:

2009/125/EC	*Ecodesign Directive*
2014/30/EU	*Electromagnetic Compatibility Directive*
2014/35/EU	*Low Voltage Directive*
2011/65/EU	*Restriction of Hazardous Substances (RoHS) Directive*

The following standards have been applied to the product(s):

IEC 62321-3-1:2013, IEC 62321-7-1:2015, IEC 62321-5:2013, IEC 62321-6:2015, IEC 62321-8:2017, DIN EN 50525-2-21:2012-01, EN IEC 60974-10:2021, EN IEC 60974-13:2021, EN 50525-2-21:2011, EN IEC 60974-1:2022+A11:2022+A12:2023, IEC 62321-4:2013+AMD1:2017, EN IEC 60974-7:2019, IEC 62321-7-2:2017, IEC 60974-1:2021, EN 60974-12:2011

The technical documentation required to demonstrate that the product(s) meet(s) the requirement(s) of the aforementioned legislation has been compiled and is available for inspection by the relevant enforcement authorities.

The CE mark was first applied in: 2025

Product Description:	Plasma Cutter
Model Number(s):	PLASMA KING 45SI
Serial/Batch Number:	Refer to product/packaging label
Date of Issue:	17/12/2025

Signed:

J.A Clarke

Director

PLASMA KING 45SI CE Clarke DOC 121725 Page 1 of 1

USEFUL ITEMS FROM THE CLARKE CATALOGUE

Metal Part Benders	Metal Folder
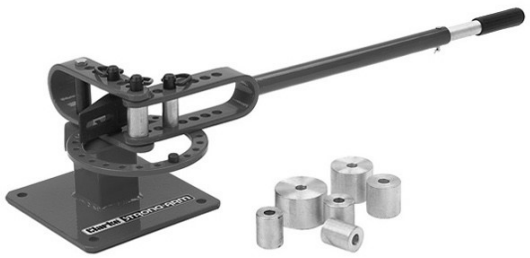	
Compact benders, ideal for creating metal components using round or square section	For fast, accurate sheet metal folding, designed to be held in a standard bench vice.

Engineering Drill Presses	Bench Grinders
	
Available for the hobbyist or professional. Ideal for fast, accurate drilling of metal and plastic. Choose from bench or floor mounted.	DIY, professional & heavy duty bench grinders, ideal for grinding garden and workshop tools and general metalworking

Parts & Service: 020 8988 7400 / E-mail: Parts@clarkeinternational.com or Service@clarkeinternational.com

A SELECTION FROM THE VAST RANGE OF

Clarke®

QUALITY PRODUCTS













AIR COMPRESSORS
From DIY to industrial, Plus air tools, spray guns and accessories.

GENERATORS
Prime duty or emergency standby for business, home and leisure.

POWER WASHERS
Hot and cold, electric and engine driven - we have what you need

WELDERS
Mig, Arc, Tig and Spot.
From DIY to auto/industrial.

METALWORKING
Drills, grinders and saws for DIY and professional use.

WOODWORKING
Saws, sanders, lathes, mortisers and dust extraction.

HYDRAULICS
Cranes, body repair kits, transmission jacks for all types of workshop use.

WATER PUMPS
Submersible, electric and engine driven for DIY, agriculture and industry.

POWER TOOLS
Angle grinders, cordless drill sets, saws and sanders.

STARTERS/CHARGERS
All sizes for car and commercial use.

PARTS & SERVICE:
0208 988 7400

Parts Enquiries
Parts@clarkeinternational.com

Servicing & Technical Enquiries
Service@clarkeinternational.com

SALES: UK 01992 565333 or Export 00 44 (0)1992 565335

Clarke® INTERNATIONAL Hemnall Street, Epping, Essex CM16 4LG
www.clarkeinternational.com